INSTALLATION ACCESSORIES

For roof & gutter applications

09109005 • Mounting bracket for gluing to roof surfaces

24x33mm • Stainless steel • 50 pc./package

34000003 • Fixing strip, 25mm C-C cable fix

20x0,6mm • Galvanized steel • 25m/roll

40049050 • Fixing rail for 6-7mm cables • 24mm C-C cable fix

1000x8mm • Plastic • 10 rails/package

40049017 • Mounting bracket, 2 cables (max ø11mm) C-C 60mm

25x125x0,25mm • Stainless steel • 1 pc./package

40049009 • Mounting bracket for easy installation in gutter & downdrain

Holds 3 cables (max ø8) & 2 cables (max ø6) • C-C 23mm

10x86mm • Plastic • 25 pc./package

40049010 • Clips for down drain

Holds 2 cables (max ø8) • C-C 20mm

6x32mm • Plastic • 25 pc./package

Version 2-072026

Heatcom Corporation A/S
Barmstedt Allé 6
5500 Middelfart
Tel. +45 63 41 77 77
Sales@Heatcom.dk

DATA SHEET

2 WARRANTY

40049014 • Edge protector for cable, suitable from gutter to down drain

25x300x1,0mm • Stainless steel • 1 pc./package

40049013 • Traverse for transition between gutter & down drain

Connects to e.g metal chain hanging into the down drain

ø6x290mm • Stainless steel • 1 pc./package

40049016 • Chain for down drain, to support the load of the cable

2,5x20mm link• Stainless steel • 100 m/spool

40049013 - Traverse holding chain & cable

34000003 - screwed onto roof surface

40049009 - holding 3 pc. 7mm cables

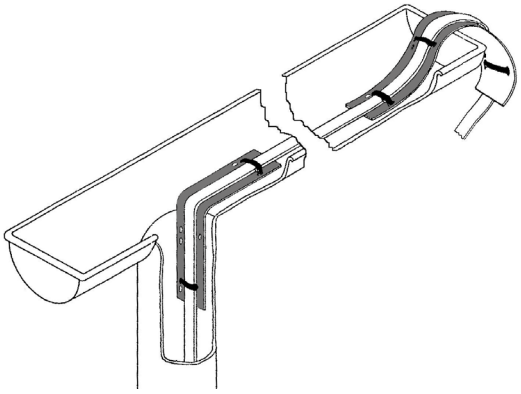

40049014 - protecting the cable going from gutter to down drain

40049017 - holding 2 pc. self-limiting cables

LINK TO WEBSITE

Heatcom Corporation A/S
Barmstedt Allé 6
5500 Middelfart
Tel. +45 63 41 77 77
Sales@Heatcom.dk